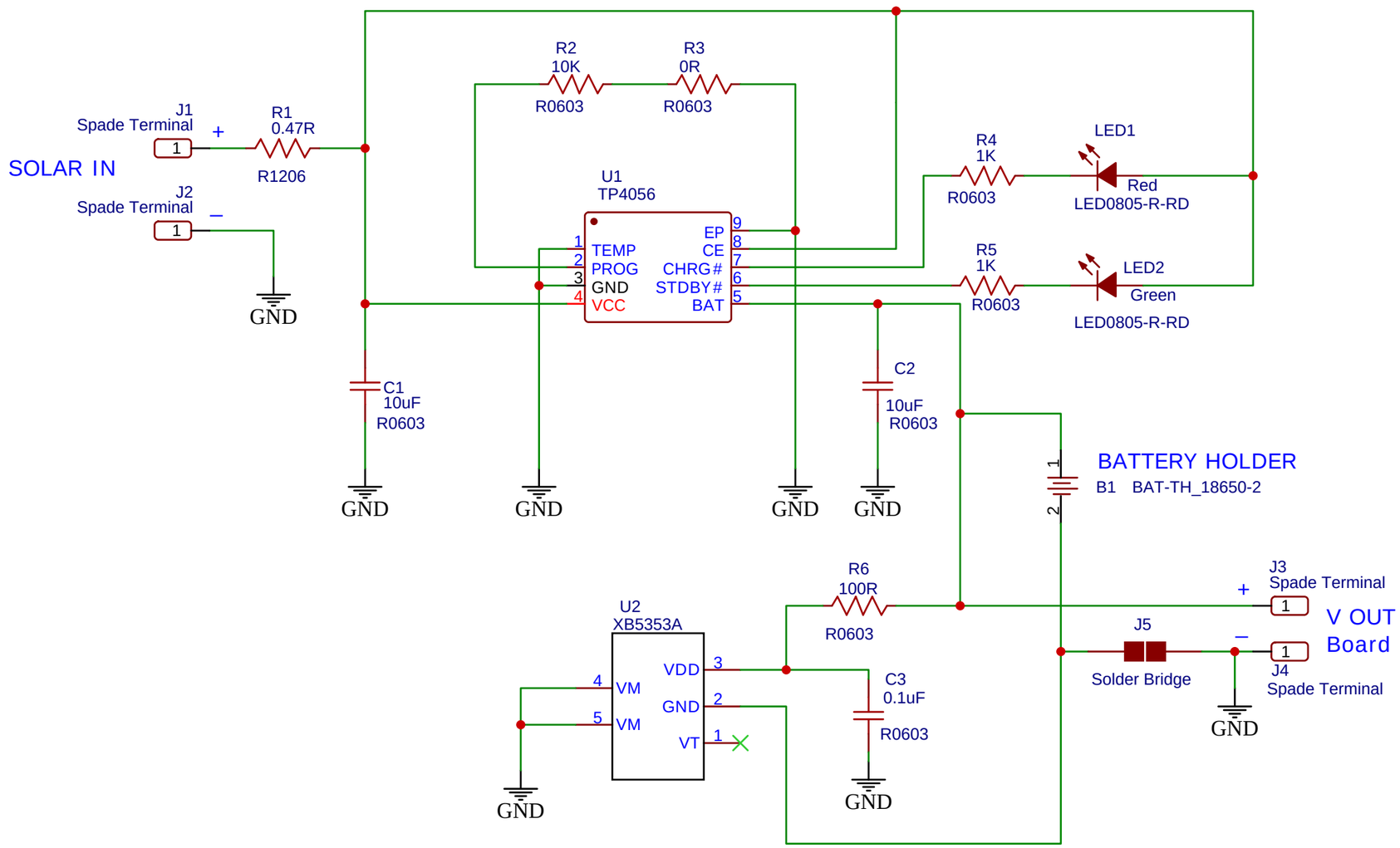

TITLE: SOLAR CHARGER	REV: 1.1
EasyEDA — Company: AGRIGEL	Sheet: 1/1
Date: 2021-04-16 Drawn By: Danny Geldenhuys	