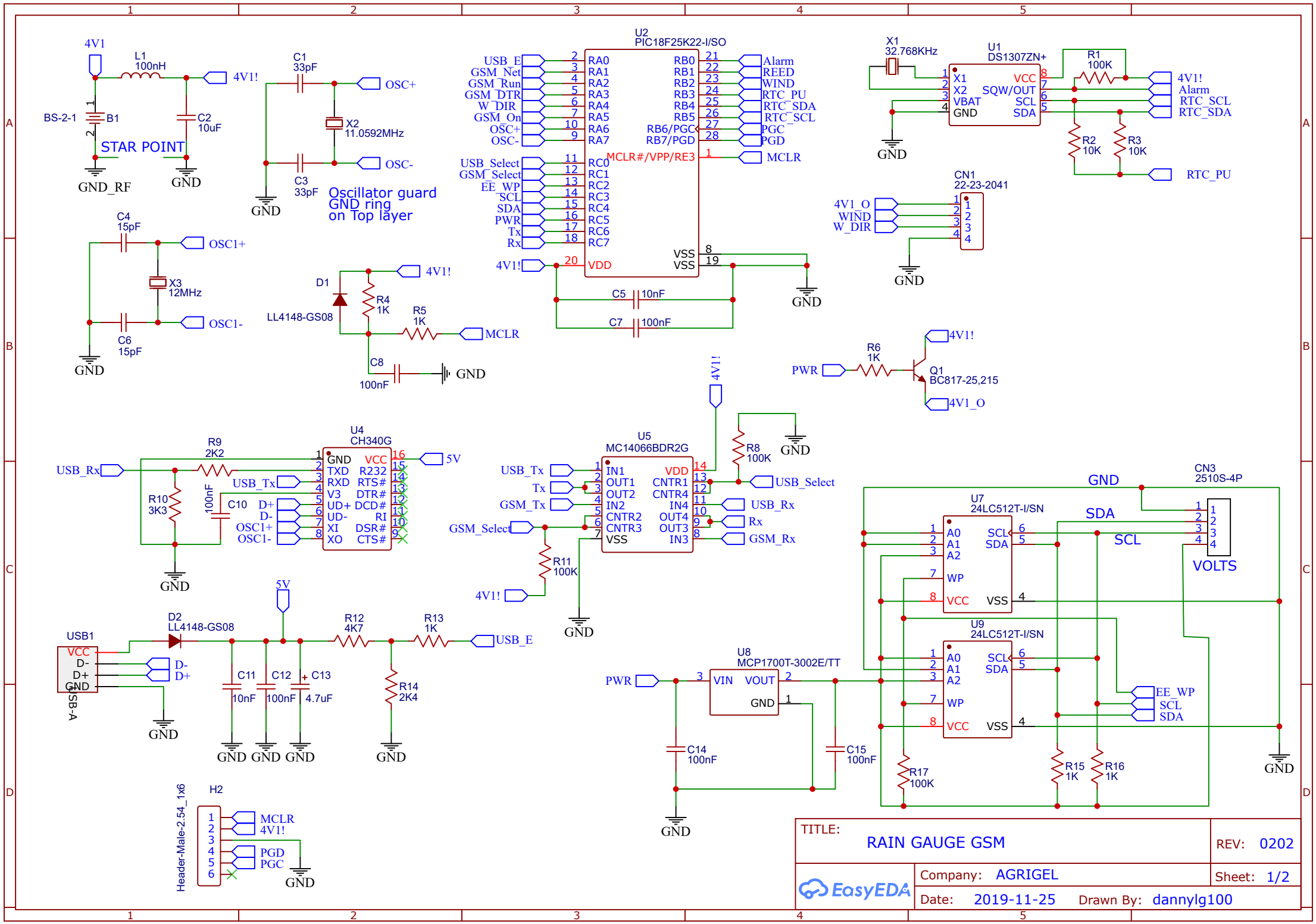
4V1
L1
100nH
4V1!
BS-2-1
B1
C2
10uF
STAR POINT
GND_RF
GND
C1
33pF
OSC+
X2
11.0592MHz
OSC-
C3
33pF
GND
Oscillator guard
GND ring
on Top layer
C4
15pF
OSC1+
X3
12MHz
OSC1-
C6
15pF
GND
D1
LL4148-GS08
4V1!
R4
1K
R5
1K
MCLR
C8
100nF
GND
U2
PIC18F25K22-I/SO
USB_E
GSM_Net
GSM_Run
GSM_DTR
W_DIR
GSM_On
OSC+
OSC-
USB_Select
GSM_Select
EE_WP
SCL
SDA
PWR
Tx
Rx
4V1!
RA0
RA1
RA2
RA3
RA4
RA5
RA6
RA7
RC0
RC1
RC2
RC3
RC4
RC5
RC6
RC7
VDD
RB0
RB1
RB2
RB3
RB4
RB5
RB6/PGC
RB7/PGD
MCLR#/VPP/RE3
VSS
VSS
Alarm
REED
WIND
RTC_PU
RTC_SDA
RTC_SCL
PGC
PGD
MCLR
C5
10nF
C7
100nF
GND
X1
32.768KHz
U1
DS1307ZN+
X1
X2
VBAT
GND
VCC
SQW/OUT
SCL
SDA
R1
100K
4V1!
Alarm
RTC_SCL
RTC_SDA
R2
10K
R3
10K
RTC_PU
GND
CN1
22-23-2041
4V1_O
WIND
W_DIR
GND
R6
1K
PWR
Q1
BC817-25,215
4V1!
4V1_O
U4
CH340G
R9
2K2
USB_Rx
USB_Tx
R10
3K3
100nF
C10
GND
5V
GND
TXD
RXD
V3
UD+
UD-
XI
XO
RTS#
DTR#
DCD#
RI
DSR#
CTS#
D+
D-
OSC1+
OSC1-
U5
MC14066BDR2G
4V1!
R8
100K
GND
USB_Tx
Tx
GSM_Tx
GSM_Select
IN1
OUT1
OUT2
IN2
CNTR2
CNTR3
VSS
VDD
CNTR1
CNTR4
IN4
OUT4
OUT3
IN3
USB_Select
USB_Rx
Rx
GSM_Rx
R11
100K
4V1!
GND
USB1
VCC
D-
D+
GND
USB-A
D2
LL4148-GS08
5V
R12
4K7
R13
1K
USB_E
C11
10nF
C12
100nF
C13
4.7uF
R14
2K4
GND
GND
GND
GND
U8
MCP1700T-3002E/TT
PWR
VIN
VOUT
GND
C14
100nF
C15
100nF
GND
GND
CN3
2510S-4P
VOLTS
U7
24LC512T-I/SN
A0
A1
A2
WP
VCC
VSS
SCL
SDA
U9
24LC512T-I/SN
A0
A1
A2
WP
VCC
VSS
SCL
SDA
EE_WP
SCL
SDA
R17
100K
R15
1K
R16
1K
GND
H2
Header-Male-2.54_1x6
MCLR
4V1!
PGD
PGC
GND
TITLE:
RAIN GAUGE GSM
REV: 0202
Company: AGRIGEL
Sheet: 1/2
Date: 2019-11-25
Drawn By: dannylg100
EasyEDA

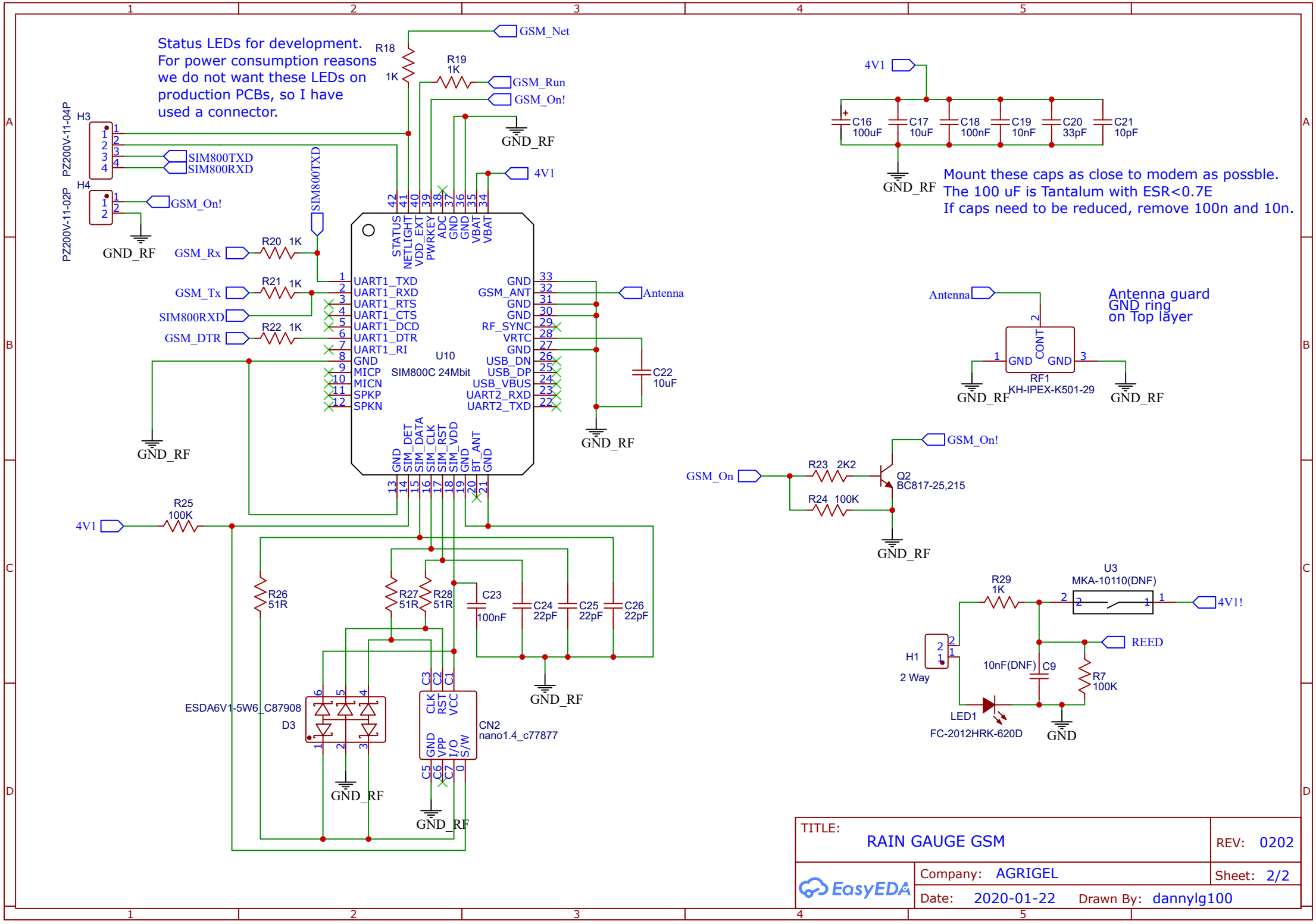
Status LEDs for development.
For power consumption reasons
we do not want these LEDs on
production PCBs, so I have
used a connector.
Mount these caps as close to modem as possble.
The 100 uF is Tantalum with ESR<0.7E
If caps need to be reduced, remove 100n and 10n.
Antenna guard
GND ring
on Top layer
U10
SIM800C 24Mbit
KH-IPEX-K501-29
BC817-25,215
MKA-10110(DNF)
FC-2012HRK-620D
ESDA6V1-5W6_C87908
nano1.4_c77877
2 Way
TITLE:
RAIN GAUGE GSM
REV: 0202
Company: AGRIGEL
Sheet: 2/2
Date: 2020-01-22
Drawn By: dannylg100
EasyEDA