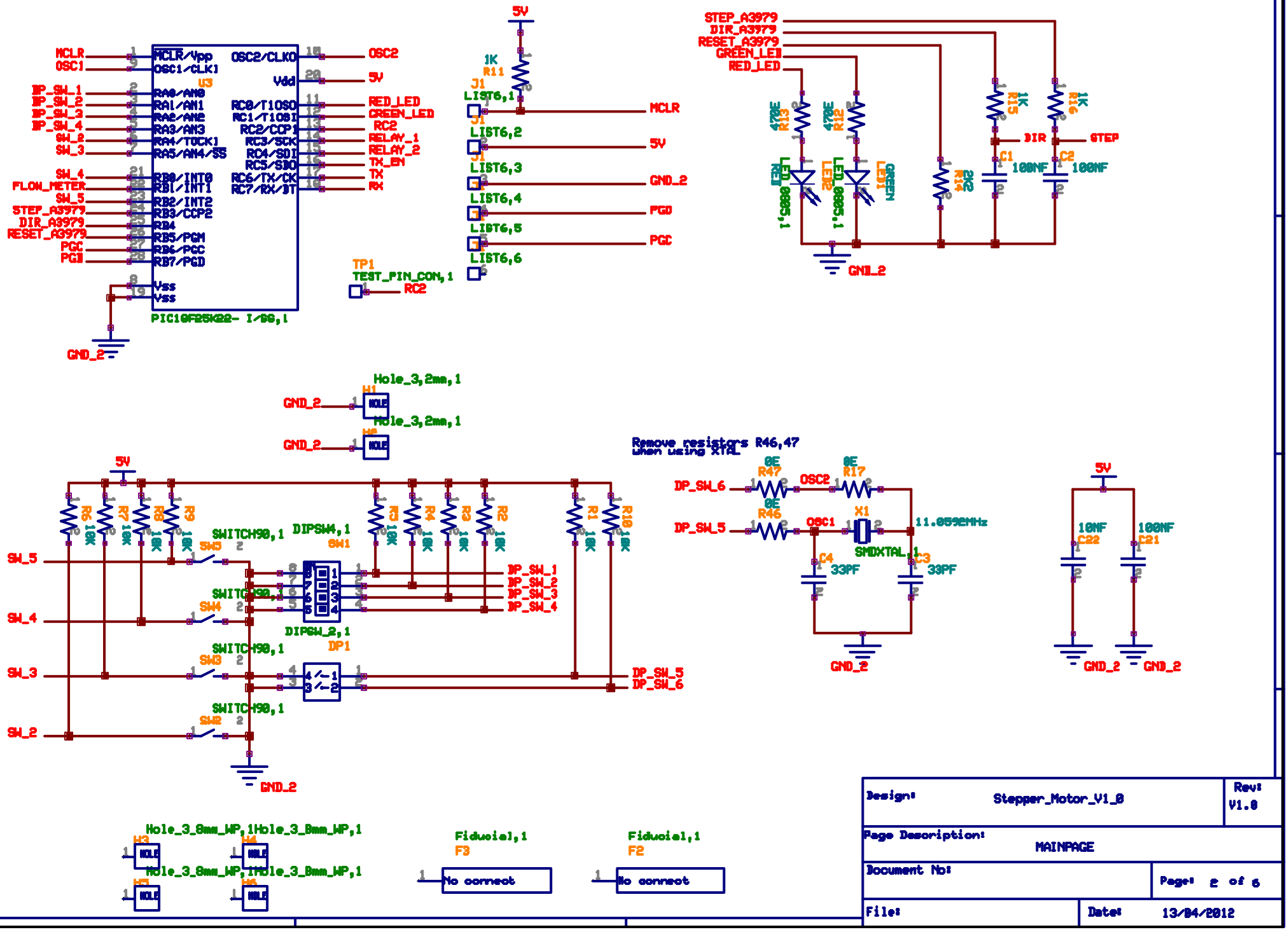

MCLR
OSC1
DP_SW_1
DP_SW_2
DP_SW_3
DP_SW_4
SW_2
SW_3
SW_4
FLOW_METER
SW_5
STEP_A3979
DIR_A3979
RESET_A3979
PGC
PGD
MCLR/Vpp
OSC1/CLKI
U3
RA0/AN0
RA1/AN1
RA2/AN2
RA3/AN3
RA4/T0CKI
RA5/AN4/SS
RB0/INT0
RB1/INT1
RB2/INT2
RB3/CCP2
RB4
RB5/PGM
RB6/PGC
RB7/PGD
Vss
Vss
OSC2/CLKO
Vdd
RC0/T1OSO
RC1/T1OSI
RC2/CCP1
RC3/SCK
RC4/SDI
RC5/SDO
RC6/TX/CK
RC7/RX/DT
OSC2
5V
RED_LED
GREEN_LED
RC2
RELAY_1
RELAY_2
TX_EN
TX
RX
PIC18F25K22- I/SS,1
GND_2
TP1
TEST_PIN_CON,1
RC2
5V
1K
R11
J1
LIST6,1
LIST6,2
LIST6,3
LIST6,4
LIST6,5
LIST6,6
MCLR
5V
GND_2
PGD
PGC
STEP_A3979
DIR_A3979
RESET_A3979
GREEN_LED
RED_LED
470E
R13
470E
R12
LED
RED
0805,1
LED
RED
0805,1
GREEN
LED1
2K2
R14
1K
R15
1K
R16
DIR
STEP
C1
100NF
C2
100NF
GND_2
Hole_3,2mm,1
H1
HOLE
Hole_3,2mm,1
H2
HOLE
GND_2
GND_2
5V
R6
10K
R7
10K
R8
10K
R9
10K
SWITCH90,1
SW5
SW4
SW3
SW2
DIPSW4,1
SW1
DIPSW_2,1
DP1
R5
10K
R4
10K
R3
10K
R2
10K
R1
10K
R10
10K
SW_5
SW_4
SW_3
SW_2
DP_SW_1
DP_SW_2
DP_SW_3
DP_SW_4
DP_SW_5
DP_SW_6
GND_2
Remove resistors R46,47
when using XTAL
DP_SW_6
DP_SW_5
0E
R47
0E
R46
OSC2
OSC1
0E
R17
X1
11.0592MHz
SMDXTAL,1
C4
33PF
C3
33PF
GND_2
5V
10NF
C22
100NF
C21
GND_2
GND_2
Hole_3_8mm_WP,1
H3
HOLE
Hole_3_8mm_WP,1
H4
HOLE
Hole_3_8mm_WP,1
H5
HOLE
Hole_3_8mm_WP,1
H6
HOLE
Fiducial,1
F3
No connect
Fiducial,1
F2
No connect
Design:
Stepper_Motor_V1_0
Rev:
V1.0
Page Description:
MAINPAGE
Document No:
Page: 2 of 6
File:
Date:
13/04/2012