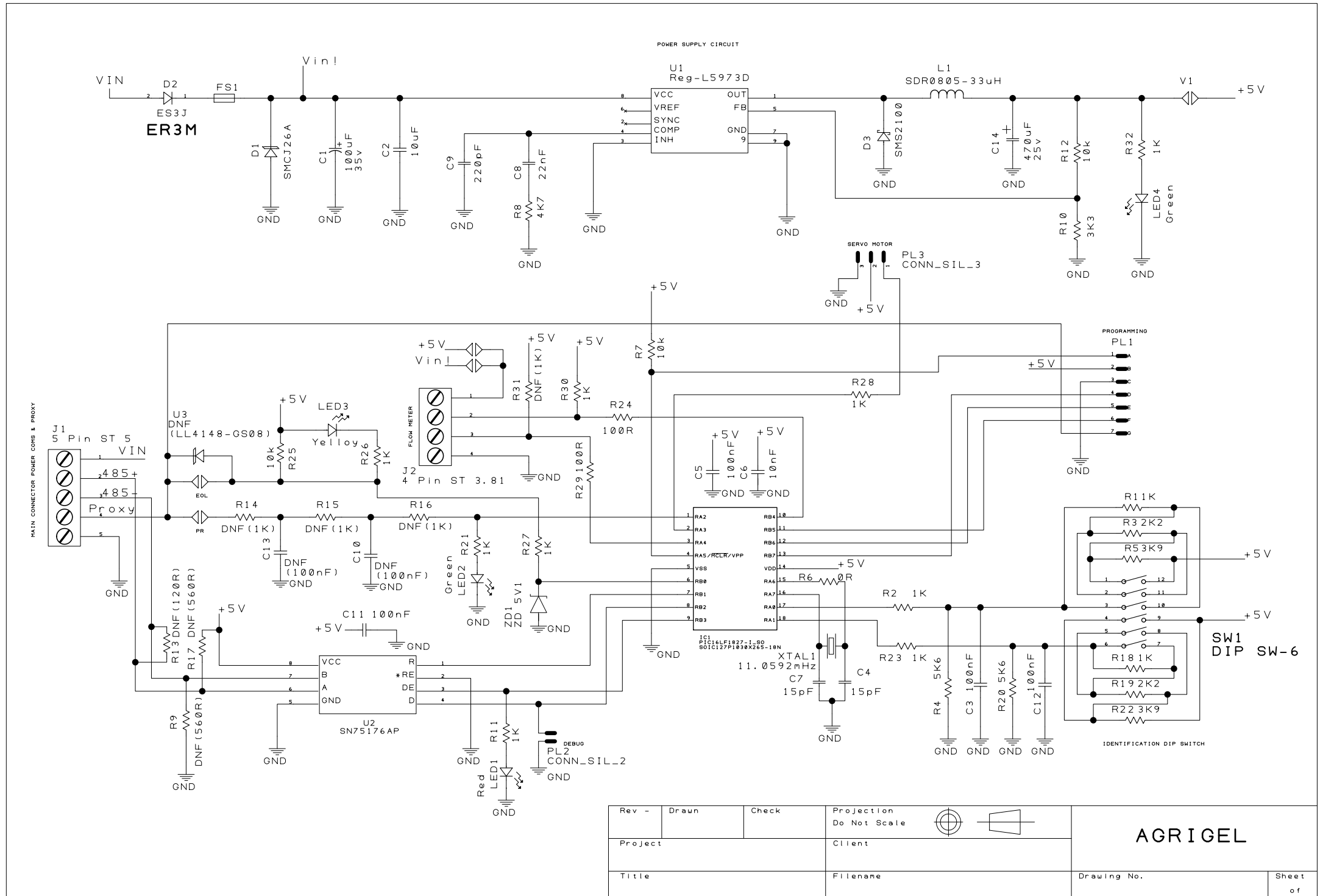

Rev -	Drawn	Check	Projection Do Not Scale	AGRIGEL
Project			Client	
Title			Filename	Drawing No. / Sheet of

A1
A3 AGRIGEL