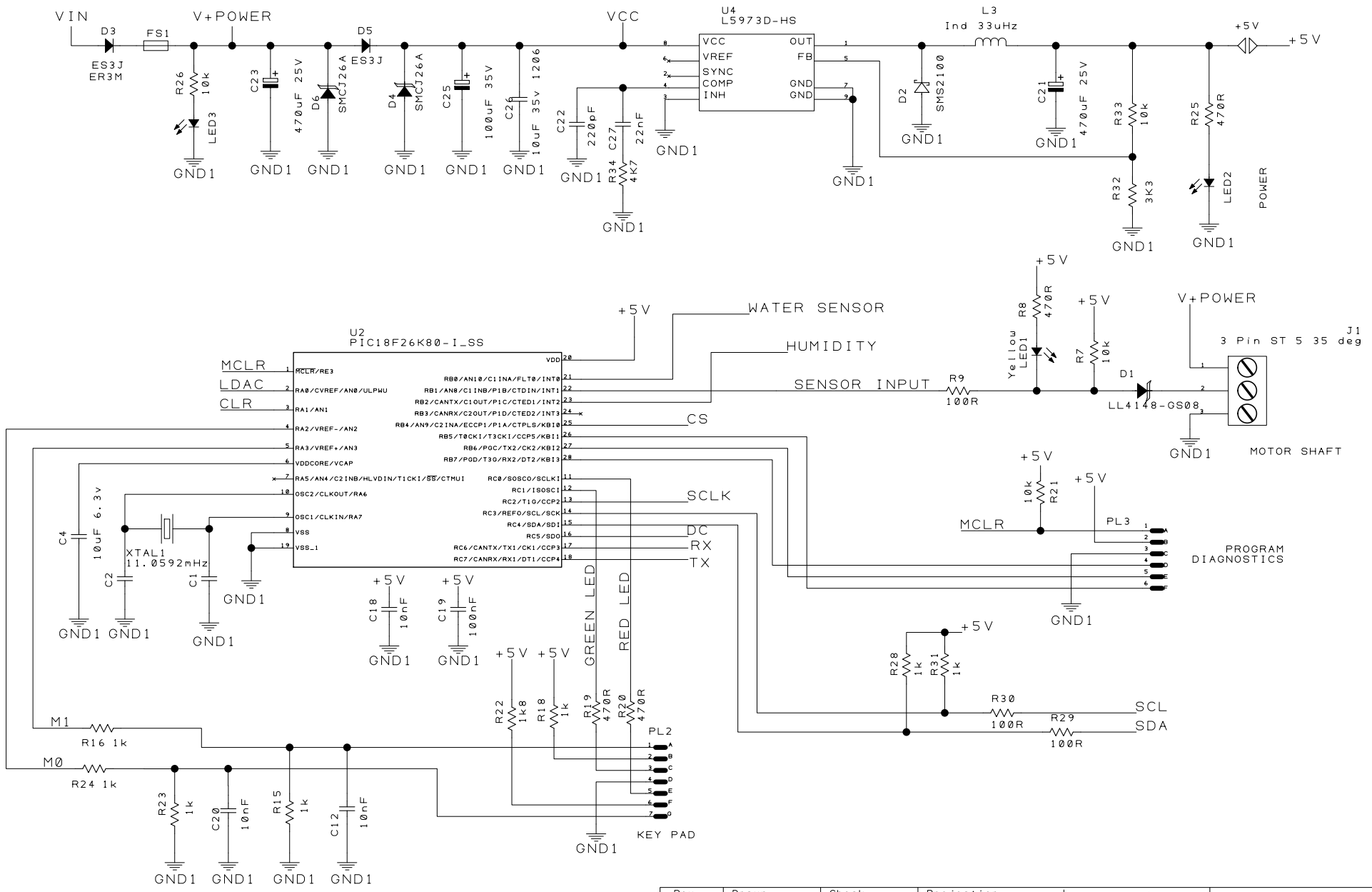


| Rev - | Drawn | Check | Projection<br>Do Not Scale | AGRIGEL |
|---|---|---|---|---|
| Project | | | Client | |
| Title | | | Filename<br>HYDRAULIC DRIVE | Drawing No. / Sheet 1 of 2 |

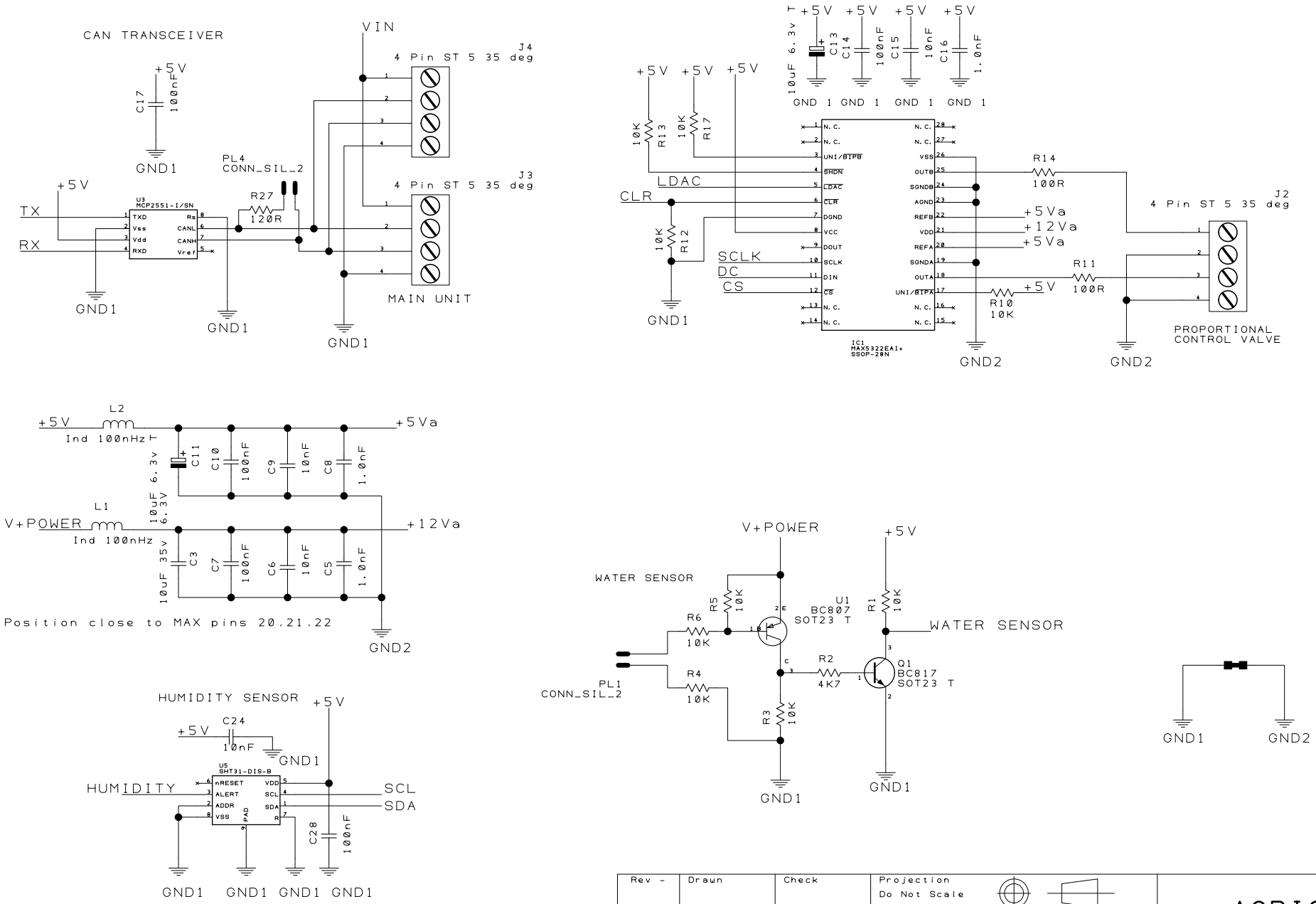


| Rev - | Drawn | Check | Projection<br>Do Not Scale | AGRIGEL |
|---|---|---|---|---|
| Project | | | Client | |
| Title | | | Filename<br>HYDRAULIC DRIVE | Drawing No. / Sheet 2 of 2 |