REVISION HISTORY			
REV	DESCRIPTION	DATE	APPROVED

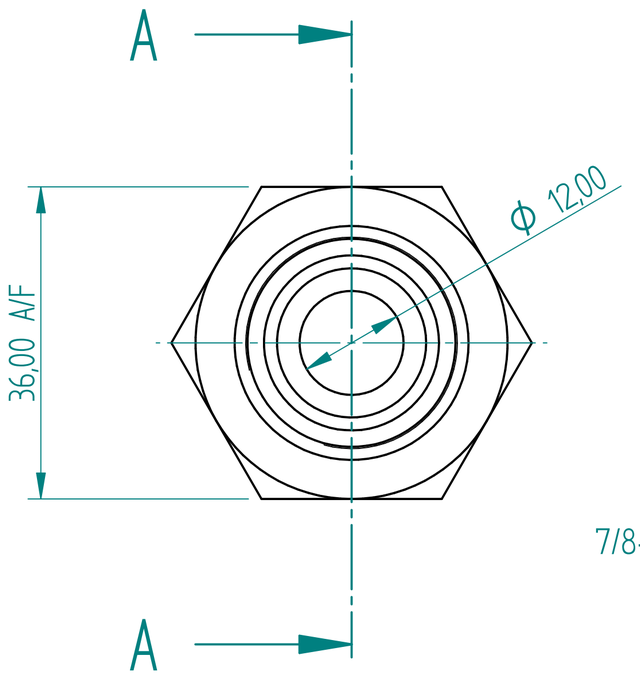

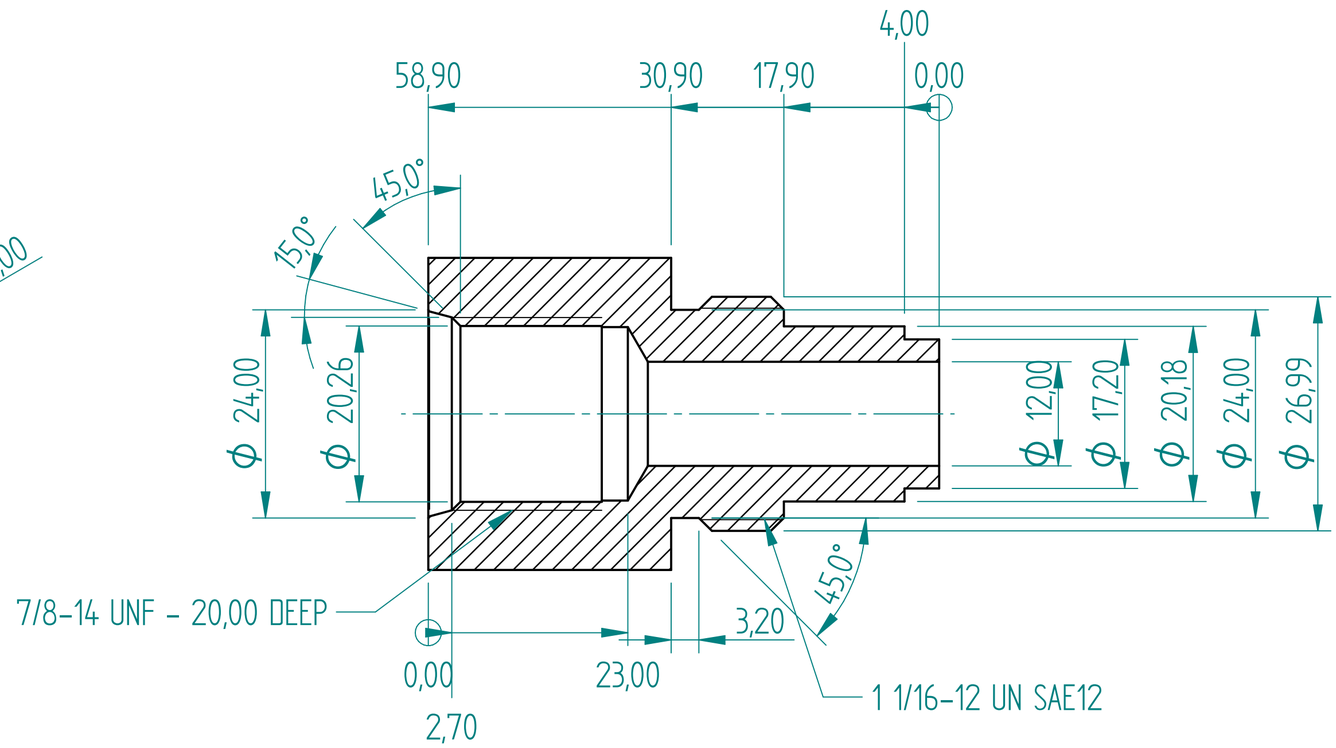

SECTION A-A

	NAME	DATE
DRAWN	Dan	09/04/23
APPROVED		
MATERIAL		
TREATMENT		

UNLESS OTHERWISE SPECIFIED
DIMENSIONS ARE IN MILLIMETERS
ANGLES ±0.1°
2 PL ±0.02 3 PL ±0.005

1 st ANGLE

PREMAC

PRECISION MACHINE MANUFACTURERS (PTY)LTD.

TITLE

SIZE A2 | DWG NO | REV

FILE NAME: SAE12 Power Beyond Sleeve.dft

SCALE: | WEIGHT: | SHEET 1 OF 1