REVISION HISTORY			
REV	DESCRIPTION	DATE	APPROVED

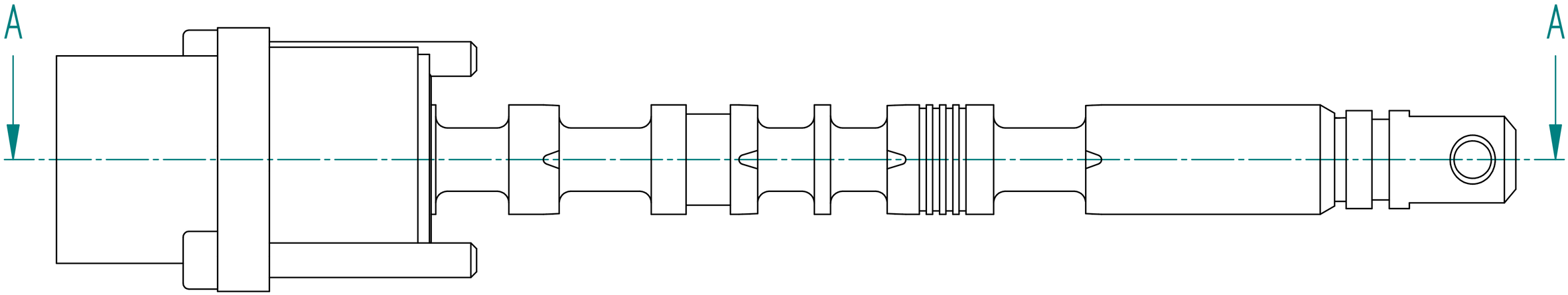

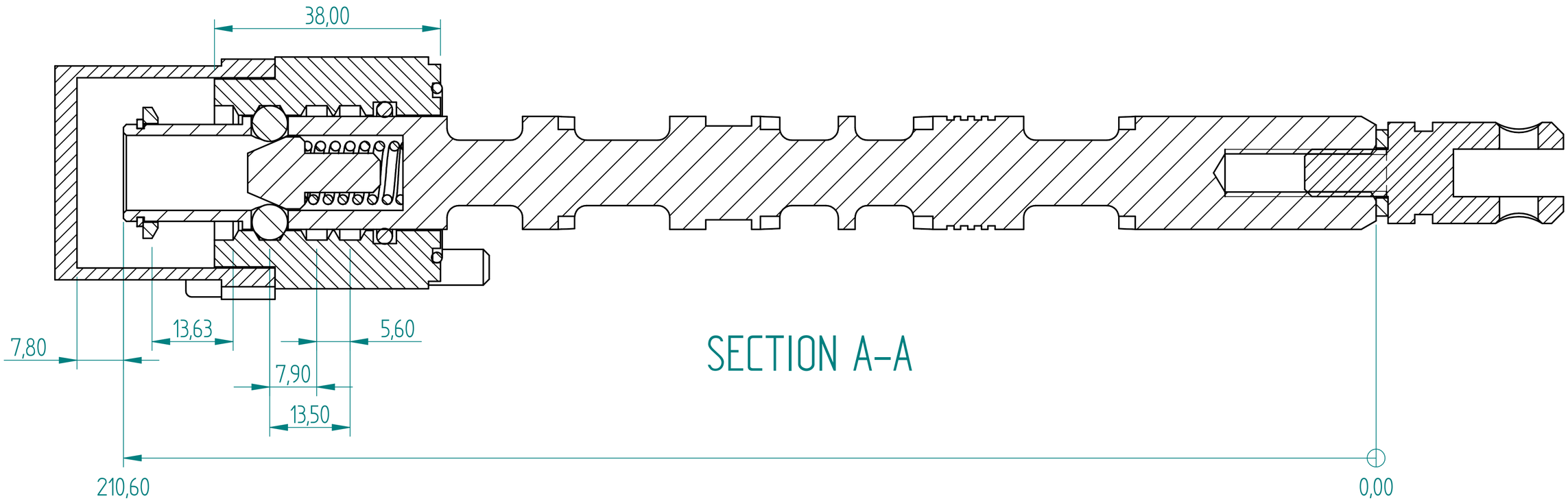

SECTION A–A

	NAME	DATE
DRAWN	Dan	09/04/23
APPROVED		
MATERIAL		
TREATMENT		

UNLESS OTHERWISE SPECIFIED
DIMENSIONS ARE IN MILLIMETERS
ANGLES ±0.1°
2 PL ±0.02 3 PL ±0.005

1 st ANGLE

PREMAC
PRECISION MACHINE MANUFACTURERS (PTY)LTD.

TITLE
Float Spool 4 Position Detent Sleeve

SIZE A2 | DWG NO | REV

FILE NAME: Float Spool 4 Position Detent.dft

SCALE: | WEIGHT: | SHEET 1 OF 6

REVISION HISTORY			
REV	DESCRIPTION	DATE	APPROVED

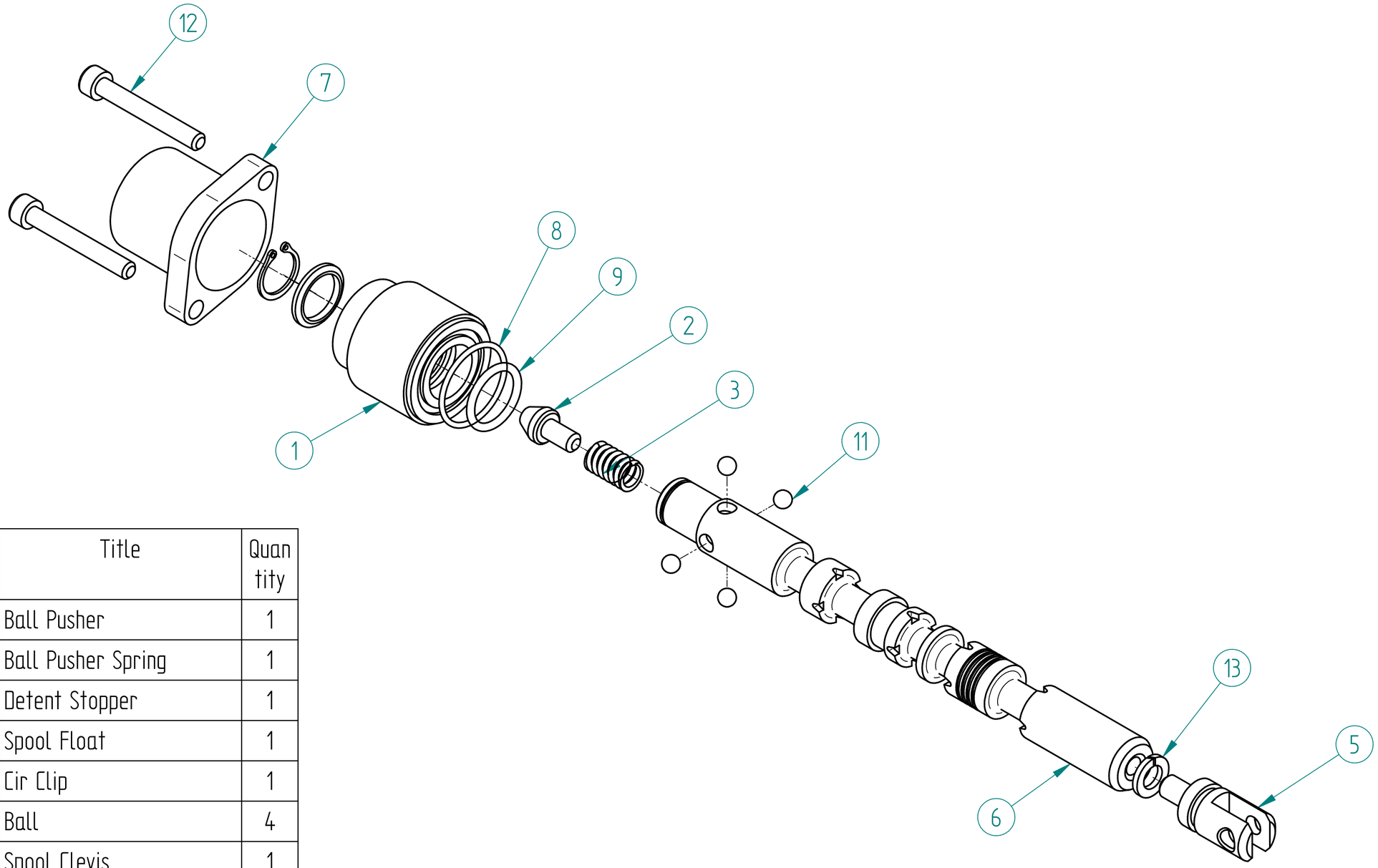

Item Number	Document Number	Title	Quan tity
1		Ball Pusher	1
2		Ball Pusher Spring	1
3*		Detent Stopper	1
4		Spool Float	1
5*	Dia 16	Cir Clip	1
6	Dia 6	Ball	4
7	P75-0045	Spool Clevis	1
8	PWS-08	Spring Washer	1

	NAME	DATE
DRAWN	Dan	09/04/23
APPROVED		
MATERIAL		
TREATMENT		

UNLESS OTHERWISE SPECIFIED
DIMENSIONS ARE IN MILLIMETERS
ANGLES ±0.1°
2 PL ±0.02 3 PL ±0.005

1 st ANGLE

PREMAC
PRECISION MACHINE MANUFACTURERS (PTY)LTD.

TITLE
Float Spool 4 Position Detent Sleeve

SIZE A2 | DWG NO | REV

FILE NAME: Float Spool 4 Position Detent.dft

SCALE: | WEIGHT: | SHEET 2 OF 6

REVISION HISTORY			
REV	DESCRIPTION	DATE	APPROVED

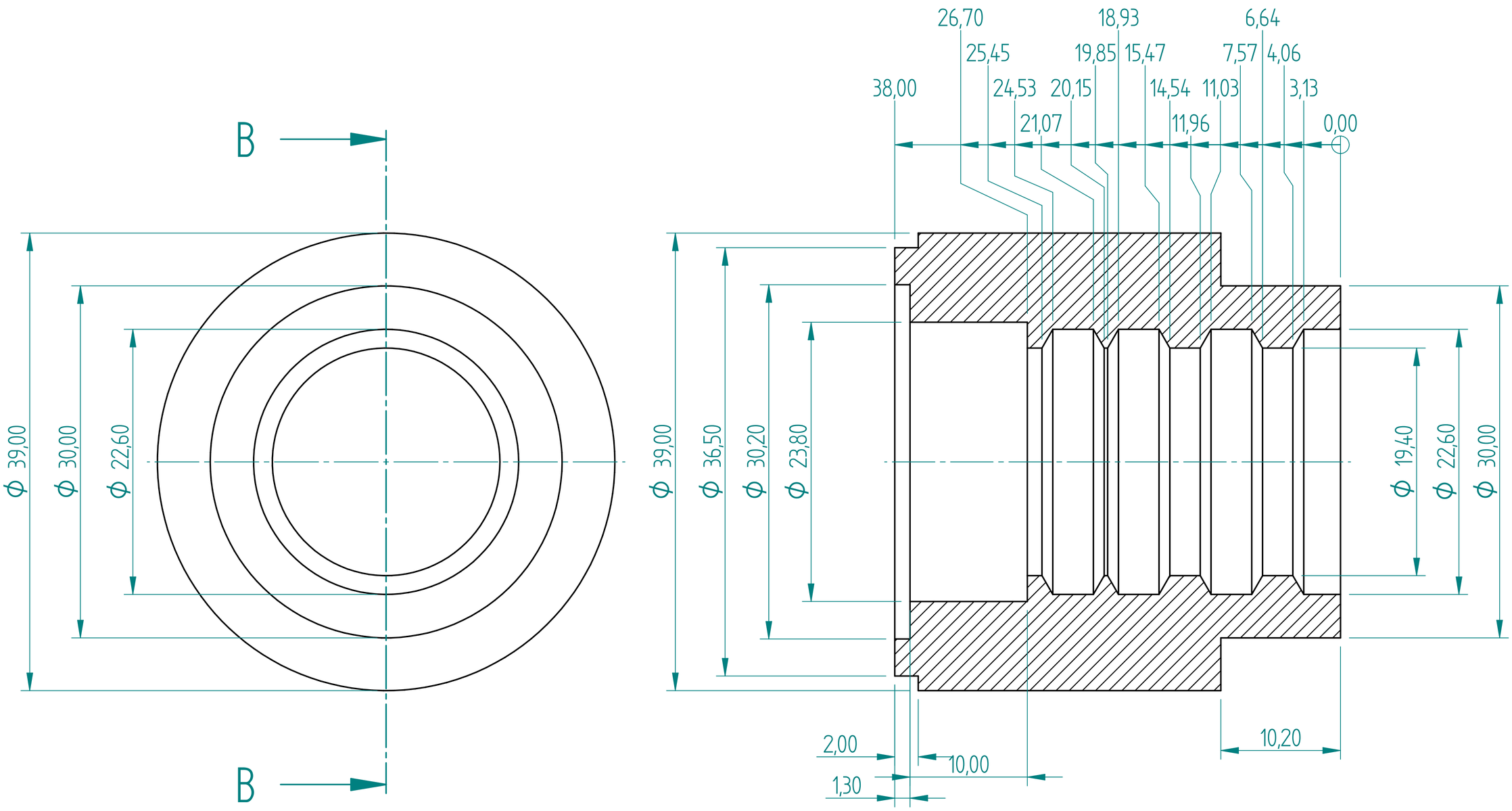

SECTION B–B

	NAME	DATE
DRAWN	Dan	09/04/23
APPROVED		
MATERIAL		
TREATMENT		

UNLESS OTHERWISE SPECIFIED
DIMENSIONS ARE IN MILLIMETERS
ANGLES ±0.1°
2 PL ±0.02 3 PL ±0.005

1 st ANGLE

PREMAC
PRECISION MACHINE MANUFACTURERS (PTY)LTD.

TITLE
Float Spool 4 Position Detent Sleeve

SIZE A2 | DWG NO | REV

FILE NAME: Float Spool 4 Position Detent.dft

SCALE: | WEIGHT: | SHEET 3 OF 6

REVISION HISTORY			
REV	DESCRIPTION	DATE	APPROVED

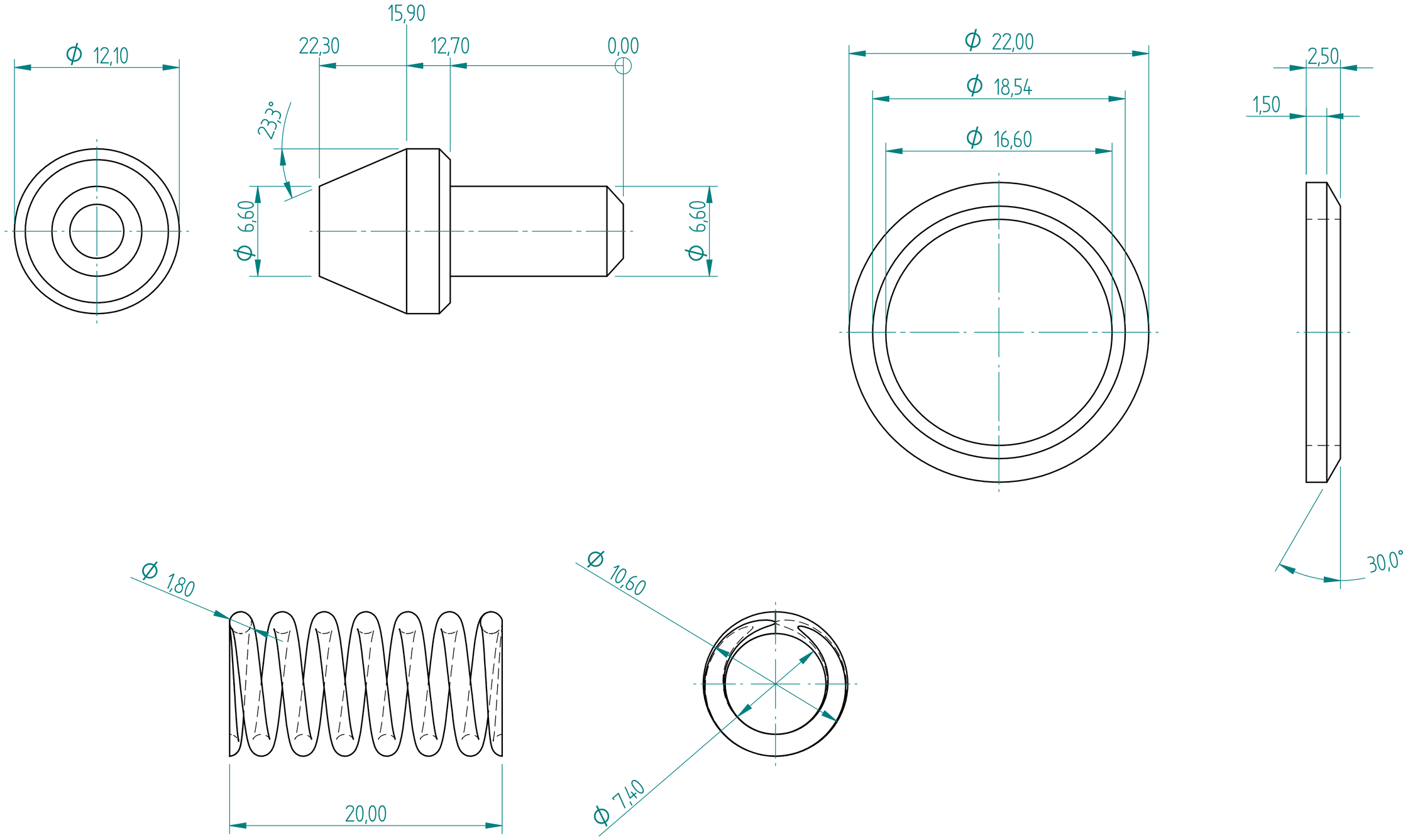

	NAME	DATE
DRAWN	Dan	09/04/23
APPROVED		
MATERIAL		
TREATMENT		

UNLESS OTHERWISE SPECIFIED
DIMENSIONS ARE IN MILLIMETERS
ANGLES ±0.1°
2 PL ±0.02 3 PL ±0.005

1 st ANGLE

PREMAC
PRECISION MACHINE MANUFACTURERS (PTY)LTD.

TITLE
Float Spool 4 Position Detent Sleeve

SIZE A2 | DWG NO | REV

FILE NAME: Float Spool 4 Position Detent.dft

SCALE: | WEIGHT: | SHEET 4 OF 6

REVISION HISTORY			
REV	DESCRIPTION	DATE	APPROVED

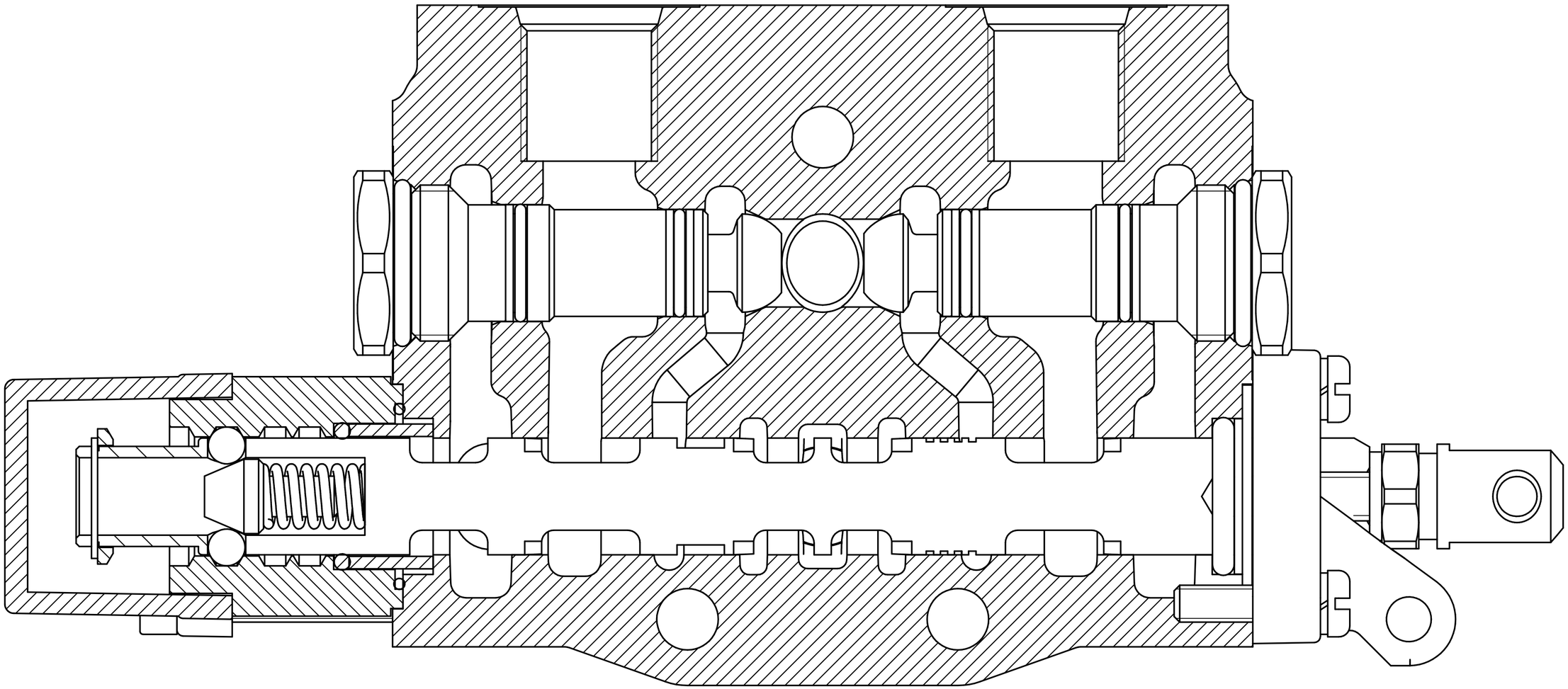

	NAME	DATE
DRAWN	Dan	09/04/23
APPROVED		
MATERIAL		
TREATMENT		

UNLESS OTHERWISE SPECIFIED
DIMENSIONS ARE IN MILLIMETERS
ANGLES ±0.1°
2 PL ±0.02 3 PL ±0.005

1 st ANGLE

PREMAC
PRECISION MACHINE MANUFACTURERS (PTY)LTD.

TITLE
Float Spool 4 Position Detent Sleeve

SIZE A2 | DWG NO | REV

FILE NAME: Float Spool 4 Position Detent.dft

SCALE: | WEIGHT: | SHEET 5 OF 6

REVISION HISTORY			
REV	DESCRIPTION	DATE	APPROVED

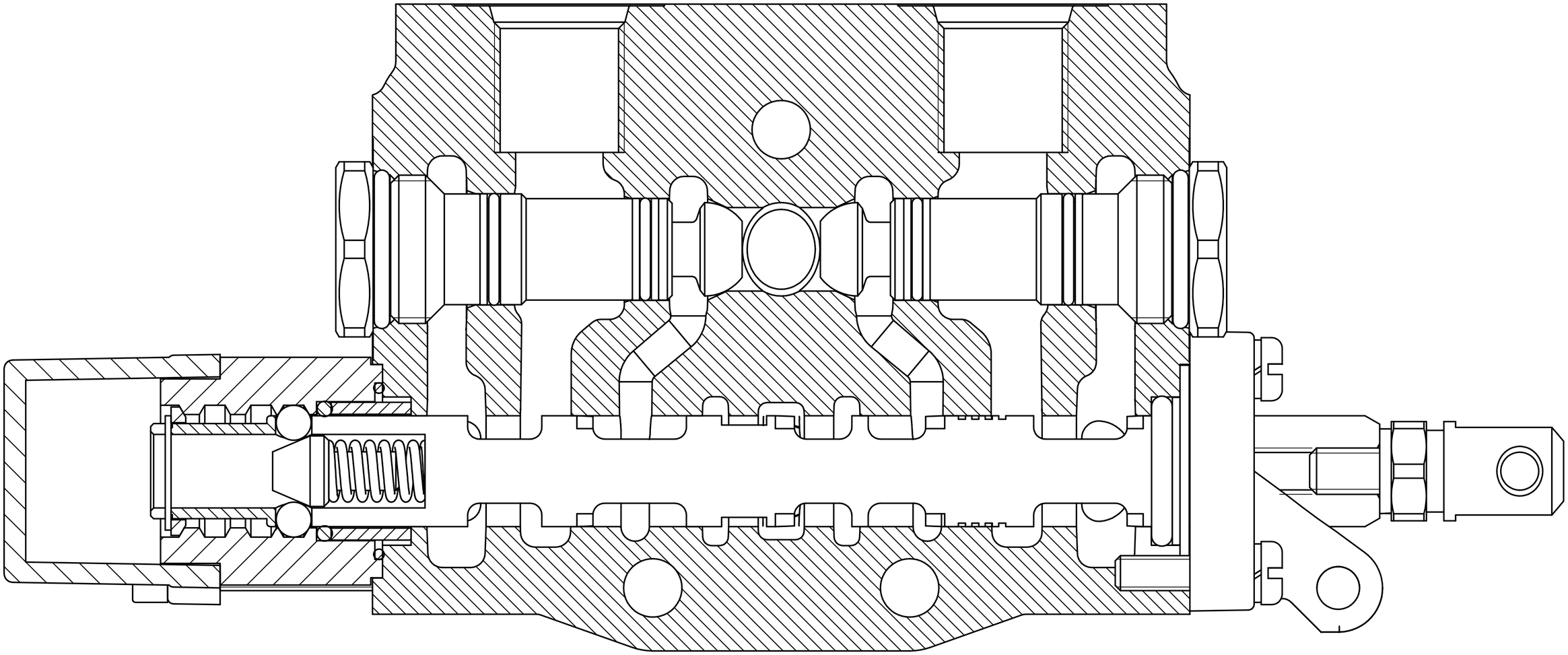

	NAME	DATE
DRAWN	Dan	09/04/23
APPROVED		
MATERIAL		
TREATMENT		

UNLESS OTHERWISE SPECIFIED
DIMENSIONS ARE IN MILLIMETERS
ANGLES ±0.1°
2 PL ±0.02 3 PL ±0.005

1 st ANGLE

PREMAC

PRECISION MACHINE MANUFACTURERS (PTY)LTD.

TITLE
Float Spool 4 Position Detent Sleeve

SIZE A2 | DWG NO | REV

FILE NAME: Float Spool 4 Position Detent.dft

SCALE: | WEIGHT: | SHEET 6 OF 6