REVISION HISTORY			
REV	DESCRIPTION	DATE	APPROVED

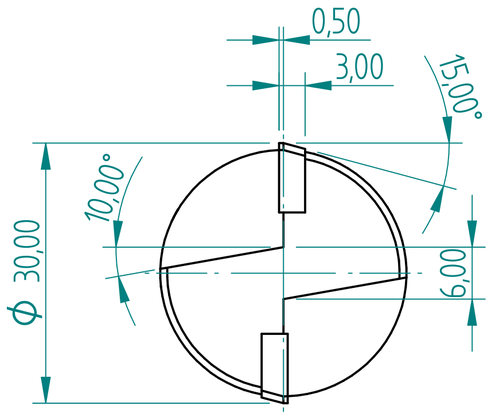

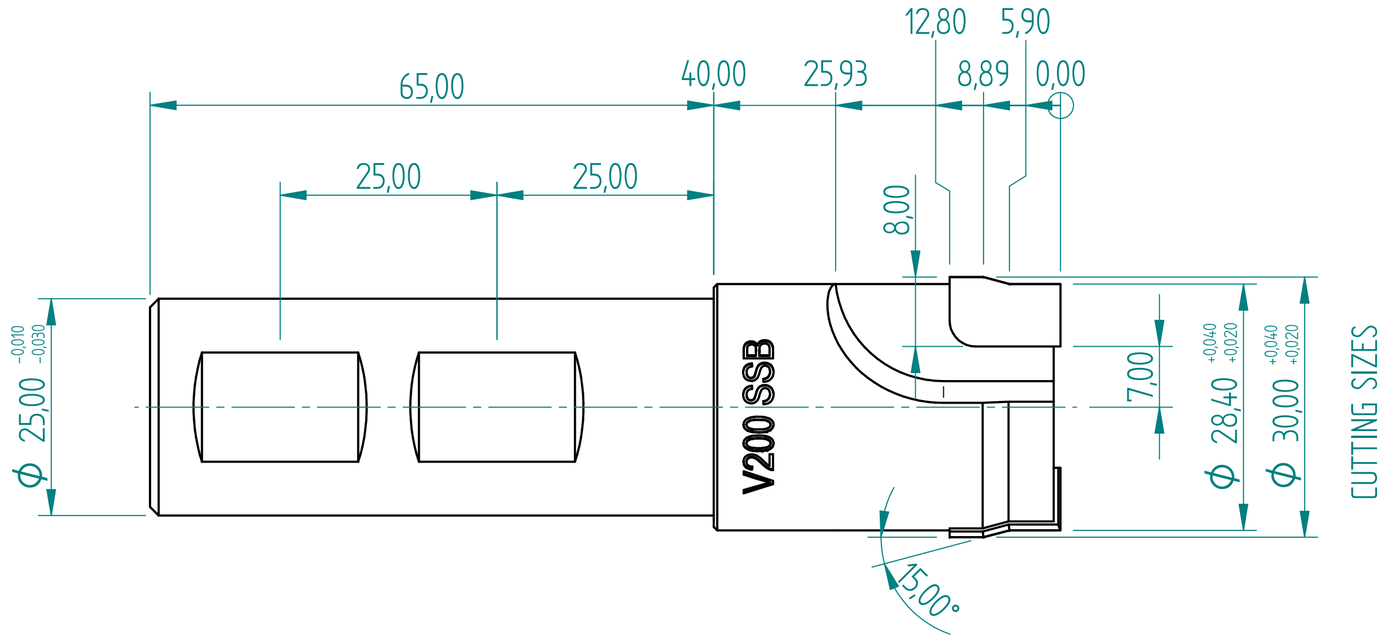

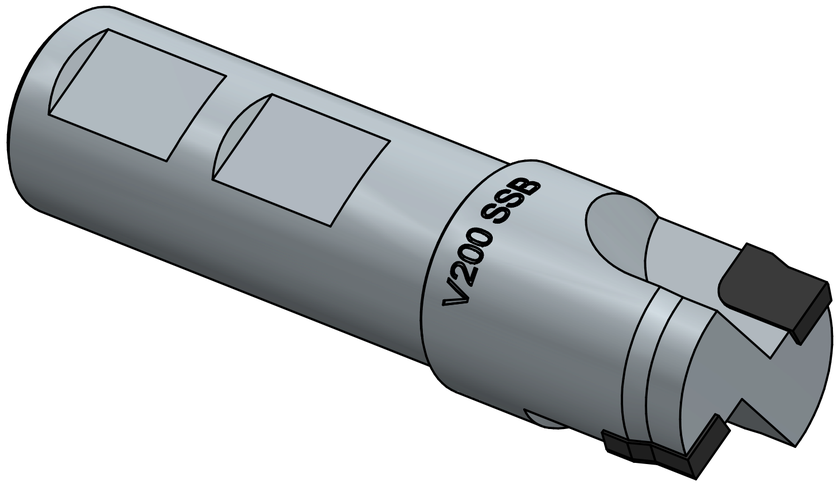

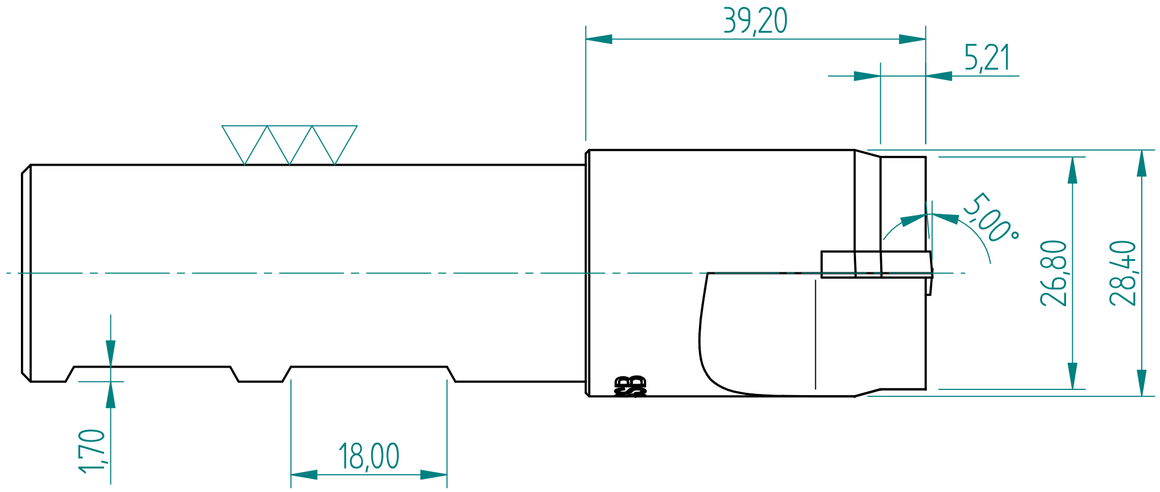

V200 Spool Sealing Bar
FOR CUTTING CAST IRON

	NAME	DATE
DRAWN	DG	10/31/17
APPROVED		
MATERIAL		
TREATMENT		

UNLESS OTHERWISE SPECIFIED
DIMENSIONS ARE IN MILLIMETERS
ANGLES ±0.1°
1 st ANGLE
2 PL ±0.02 3 PL ±0.005

PREMAC

TITLE
V200 Spool Sealing Bar

SIZE A4 | DWG NO V200 SSB | REV

FILE NAME: Spool Sealing Bar.dft

SCALE: | WEIGHT: | SHEET 1 OF 3