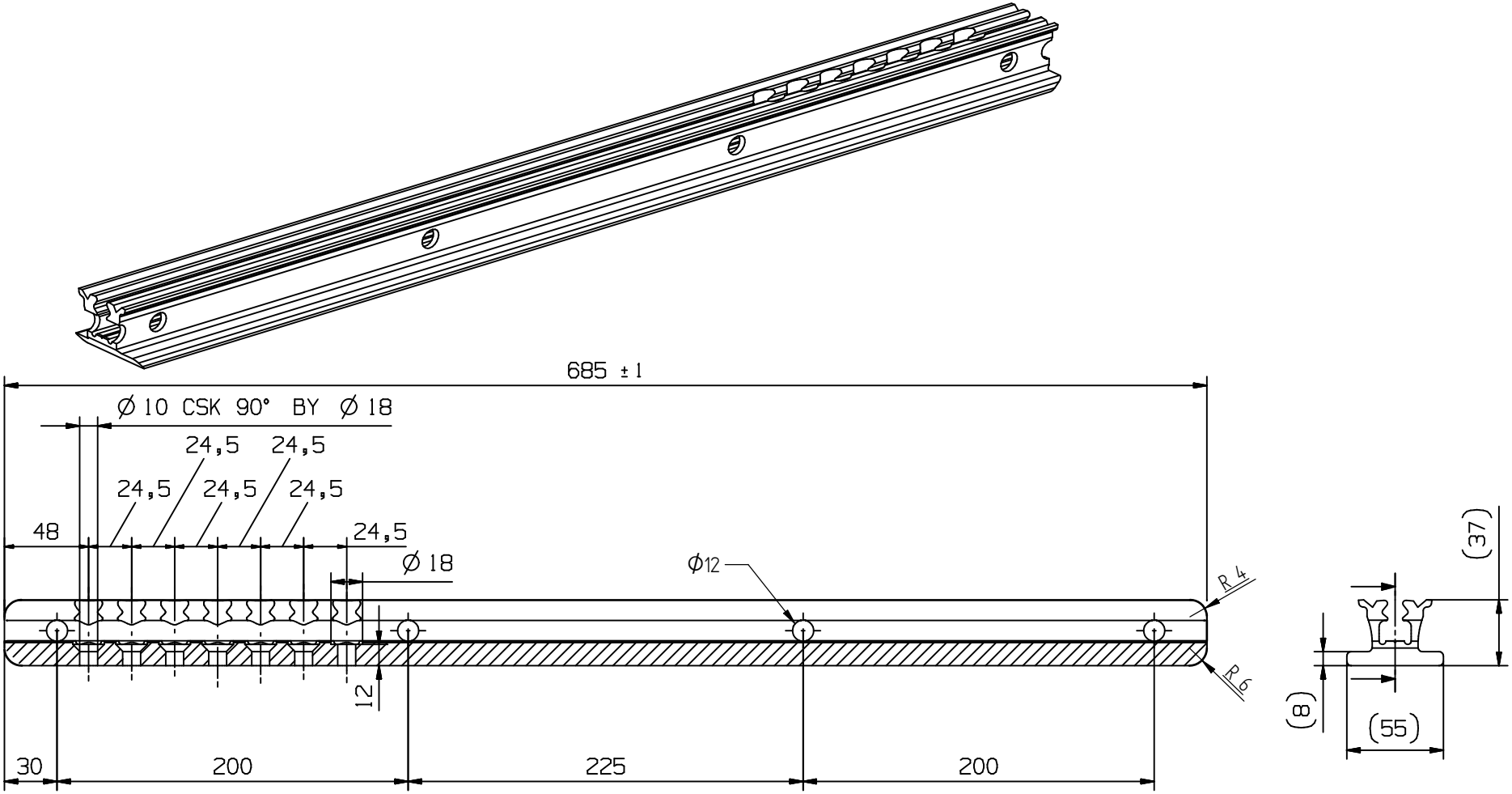

MASS = 1,66 kg

REV.	DETAIL OF CHANGE	DCP NO.	DATE
1.0	ISSUED FOR COMMENT	-	20/10/05

MATERIAL & SIZE	ALUMINIUM EXTRUSION, CUT TO SUIT			
GRADE	-			
FINISHING PROCESS	-			
USED ON / FOR:		ASSEMBLY DRG.		
		JDvH	20 OCTOBER 2005	1.0
APPR.	DATE	DRAWN	DATE 1st ISSUE	REVISION

ASSOCIATED DOCUMENTS
RW-19-00-00-R1.pdf
RW-19-00-00-R1.dxf
RW-19-00-00-R1.dwg

SURFACES TO BE SCRATCH FREE

U.O.S. TOLERANCE TO ISO 2768-mK

GENERAL SURFACE FINISH 3,2 um RMS U.O.S.

REMOVE SHARP EDGES AND BURRS 0,3 MAX.

RENE WEGKAMP 083 459 4612
JACK VAN HEERDEN 083 255 6619

DRAWING TO ISO STANDARDS

DIM. IN mm

HYDROFLOOR MANUFACTURING (PTY) LTD

TITLE
FLOOR CLAMP, OFFSET

DRAWING NO.
RW-19-00-00

SHT SIZE	SCALE	SHEET NO.
A3	1:2,5	1 OF 1