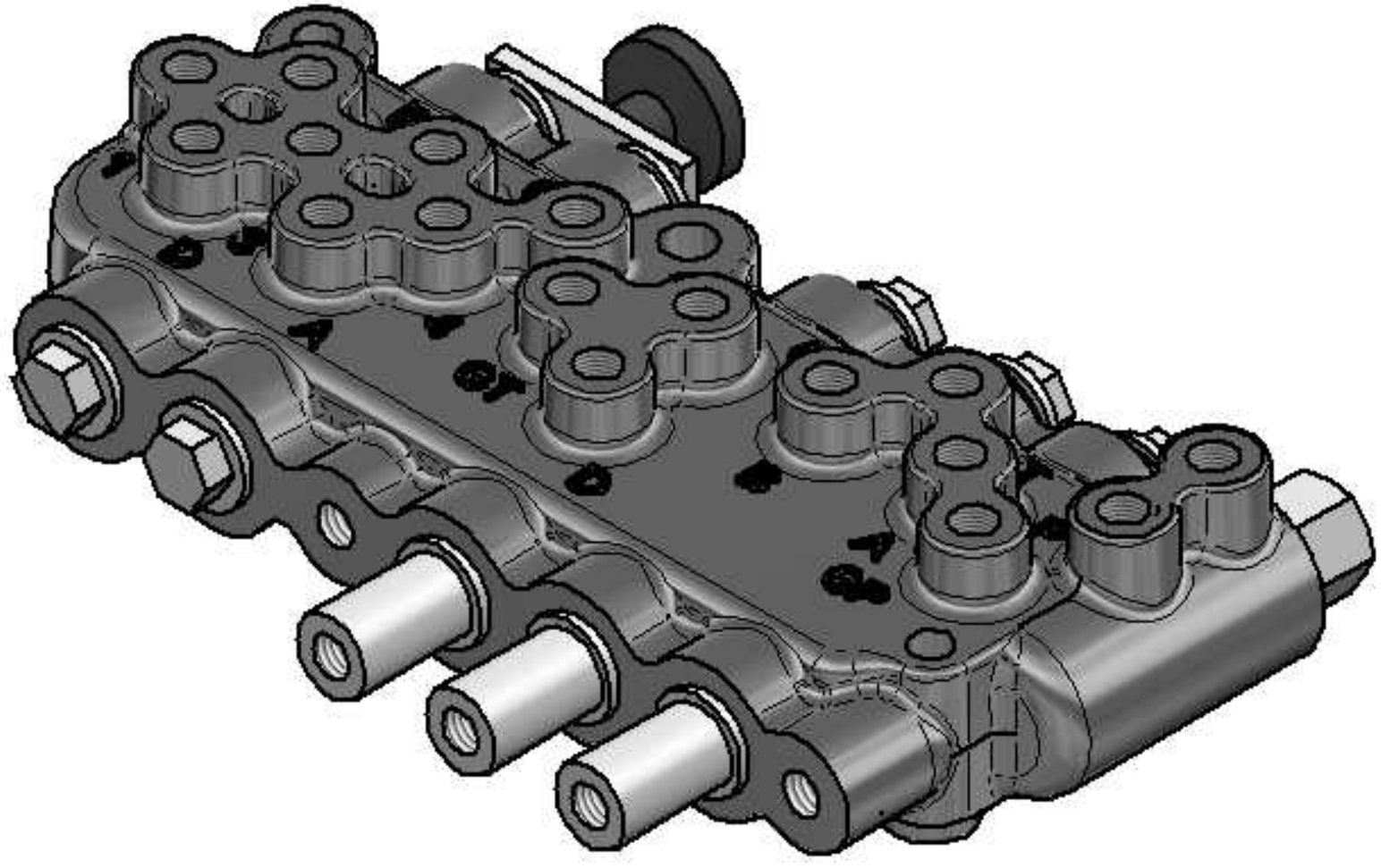

PREMAC