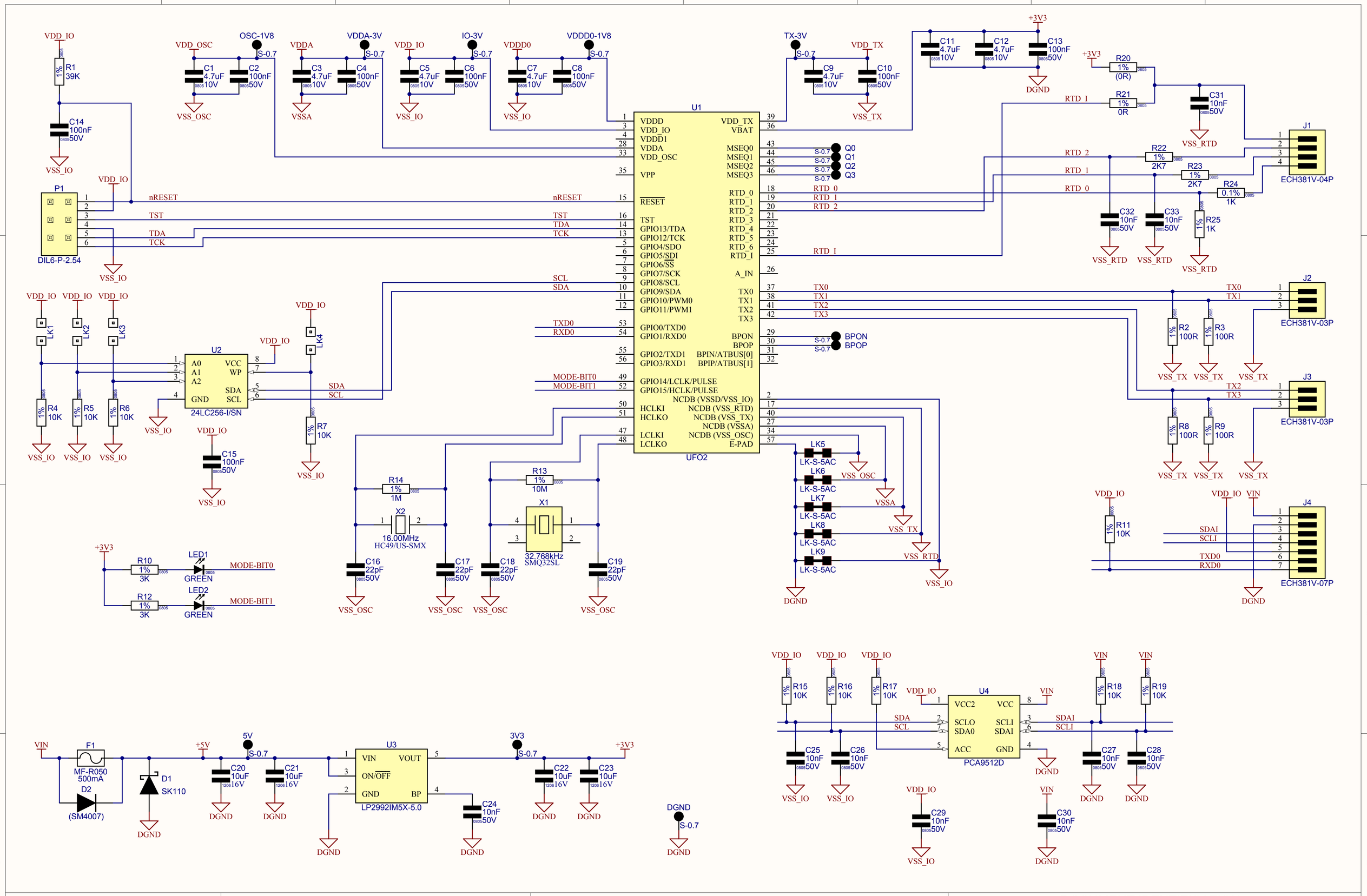

NOTES:

AGRIGEL

DOCUMENT APPROVAL						
DRAWN	REVIEWED	APPROVED	QA	CM	DATE	ECR NO.
DG	DG	DG	-	-	05/06/2014	-

DOCUMENT IDENTIFICATION

TITLE: UFO2 Flow Meter

DOC NUMBER: NA | SHEET 1 OF 1

SOURCE FILE: UFO2-FM.SchDoc | VER: 01.00 | DOC REV 01